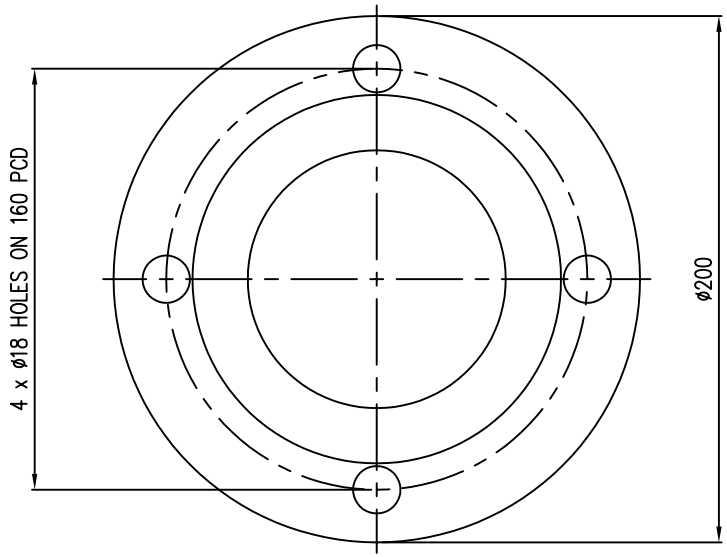

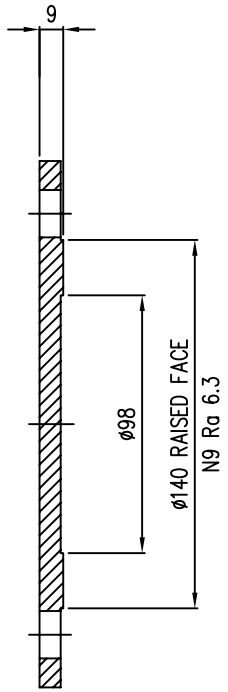

REV	DATE	AMENDMENT	BY WHOM	AUTHORISED BY

SWIFT ENGINEERING (PTY) LTD.
Freddie Visser *E-mail: fredvis@swifteng.co.za*

MATERIAL	S/STL. 316L
SCALE	1:2
DRAWN	K.MOHUTSIWA
CHECKED	
DATE	10-12-2004

THIS DRAWING IS THE PROPERTY OF SWIFT ENGINEERING. IT MUST NOT BE COPIED OR DISCLOSED TO A THIRD PARTY WITHOUT THEIR WRITTEN CONSENT.

TITLE 3" (80NB) TOP DIS-CHARGE BLIND FLANGE

DRG. No. STF7014 WEB

Rev